NRP

MULTIPURPOSE HEAT PUMPS
2 AND 4-PIPE SYSTEMS
PLUS PRODUCTION OF DOMESTIC HOT WATER

Multipurpose air cooled units with axial fans.
For external installation. High efficiency version.

MULTIPURPOSE NRP

The NRP series from Aermec. A value choice.

The NRP series represents for Aermec an entry into the world of heat pump units of the multipurpose type: units that allow simultaneous production of chilled water and hot water in the most versatile and efficient way.

The NRP Multipurpose heat pump is capable of satisfying simultaneously and independently all the requirements for cooling, heating and production of domestic hot water.
All this in the most rational and efficient way: the multipurpose heat pump units are the most efficient current technology because they extract the maximum recovery of heat of condensation; heat that would otherwise be rejected to the external ambient.

The NRP heat pumps are therefore the units most suitable for 4 pipe systems (simultaneous demands for heating and cooling) and for 2 pipe systems + domestic hot water (simultaneous heating and production of domestic hot water; simultaneous cooling and production of domestic hot water).

Aermec technology has a heart. And it is green.

- Simultaneous and independent production of hot water and cold water
- Production of domestic hot water all year round
- Very high energy efficiency, particularly at part load, through the multipurpose logic and the **MultiScroll Technology**
- Maximum reliability through the **MultiCircuit system**
- **Many solutions** to adopt: we have **now shell and tube** version available
- Extremely simplified plant: reduced time and cost of installation

-40%

Primary energy annual saving

Compared to traditional chiller + boiler installation

-8dB(A)

Average noise level reduction

Of Extra Low Noise models compared to standard models

-35%

Installation cost reduction

Compared to traditional chiller + boiler installation

-40%

Reduction of CO_2 emissions

Carbon dioxide is responsible for the greenhouse warming effect

Green Comfort, versatility and savings. Aermec technology. To the service of air and water.

Cooling and heating simultaneously and independently

The Aermec NRP Multipurpose heat pump is the ideal choice for all applications that have simultaneous and independent requirements for heating and cooling . In general modern buildings in the commercial, lodging and health care sectors have heating and cooling demands not directly linked with seasonal variations. This creates the need to provide simultaneous and independent chilled water for space cooling and dehumidification and hot water for space heating and/or for the production of domestic hot water. The Aermec NRP Multipurpose heat pump unit does all this: it is the unit most suitable for 4 pipe systems (simultaneous requests for cooling and heating) and for 2 pipe systems + domestic hot water.

Maximum savings economic/energy

Aermec is the most efficient choice from the energy and running cost point of view.
The simultaneous production of hot water and of chilled water allows the free recovery of the heat of condensation which would otherwise be rejected outdoors.
At the times of simultaneous demand for heating and cooling the NRP heat pump unit reaches maximum efficiency because it simply transfers energy from the spaces to be cooled to the spaces to be heated or to the domestic hot water. The multiscroll technology serves to further increase the energy efficiency especially at part load.

Extremely simplified plant

The Aermec NRP Multipurpose heat pump unit allows the utmost simplification of the plant and to significantly reduce the time and cost of installation.
Through the multipurpose technology the installation requires no gas: a gas fired boiler is not required.
NRP makes available hot water for heating and domestic hot water throughout the year, independently and also simultaneously to the demands for chilled water.

Environmental respect

With the multipurpose technology and use of non-ozone depleting refrigerant R410A, the NRP series is a friend to the environment. R410A is also a thermodynamically high efficiency refrigerant which allows, together with the use of scroll compressors, to reduce CO2 emissions. Adding the savings for cooling, heating and production of domestic hot water the emissions of CO2 compared to a traditional chiller + boiler system are reduced by 40%.

TER: Total Efficiency Ratio

The energy efficiency of traditional heat pump units is measured by the parameters of EER for cooling mode and COP for heating mode. For the new multipurpose type of heat pumps a parameter is required that takes into account the simultaneous production of hot water and chilled water. This new parameter is the TER (Total Efficiency Ratio), defined as the ratio between the total capacity produced simultaneously (heating and cooling) and the electrical power input to the unit:
TOTAL EFFICIENCY RATIO: TER = (Heating Capacity + Cooling Capacity) / Electrical Power Input
Looking at the technical data for the NRP series it can be seen that the TER values are significantly higher than the values for COP and EER: this demonstrates the overall very high efficiency that a multipurpose heat pump unit can achieve compared to a traditional heat pump without heat recovery. The project designer (in close collaboration with the architect) can therefore achieve the maximum energy savings, optimally balancing the heating and cooling needs for the system installation.

The ideal solution for public and residential buildings.

NRP is the most rational and efficient choice for all buildings that typically have heating capacity and cooling capacity demands for the whole year, such as: hospitals, hotels, and buildings for residential use.
The NRP Multipurpose heat pump is the most convenient solution from an energy saving point of view for both 4 pipe systems and 2 pipe systems with domestic hot water production.
The following graphs show the results obtained in different Italian geographical locations and for various system installations (4 pipe system for offices – 2 pipe system + domestic hot water for hotels).
The results are extraordinary: the Aermec NRP multipurpose technology is shown as the most economical and environmentally friendly.

Energy Saving Calculation for a 4 pipe system office building

Energy bill for an office 4 pipe system case (% €)

The results show a significant saving on the energy bill even compared to a chiller with heat recovery + condensing boiler.

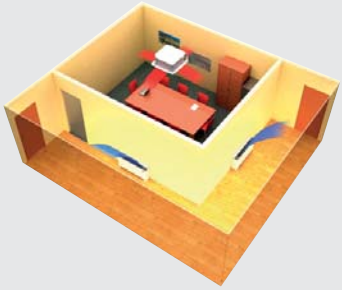

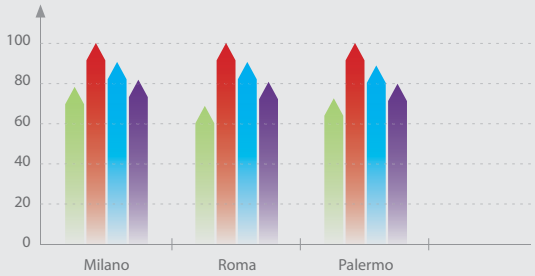

Primary energy consumption for an office 4 pipe system case (% kWh)

The primary energy savings are significant and ensure total environmental friendliness.

- Aermec NRP Multipurpose
- Chiller + boiler
- Chiller with desuperheater + boiler
- Chiller with total heat recovery + boiler

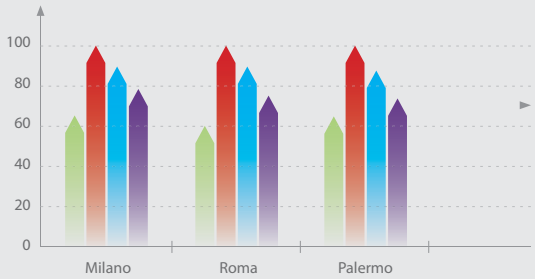

Energy Saving Calculation for a 2 pipe system + Domestic Hot Water

Energy bill for a hotel 2 pipe system + domestic hot water (% €)

The Aermec NRP Multipurpose series also provides the best in the lodging sector, where space cooling and heating needs are added to by a high demand for domestic hot water production.

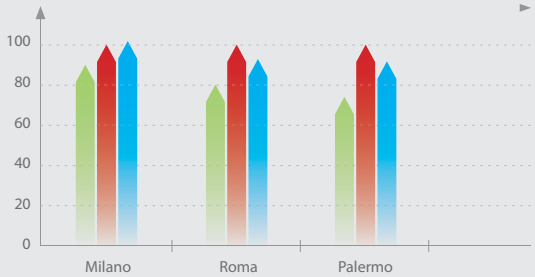

Primary energy consumption for a hotel 2 pipe system + domestic hot water (% kWh)

Even in the lodging sector the most environmentally friendly choice is the Aermec NRP technology.

- Aermec NRP Multipurpose
- Chiller + boiler
- Heat pump + boiler

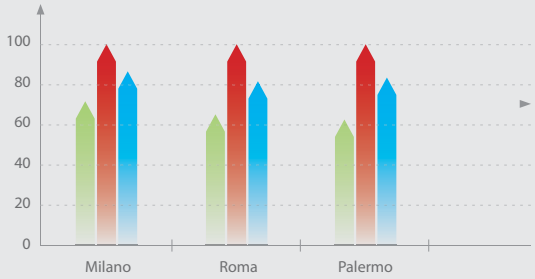

Description of operation

The NRP Multipurpose operating schematics are detailed for various 2 pipe and 4 pipe systems.
Exchanger availbles: fit plate and shell&tube.

Basic operating production for 2-pipe system+ HDW

Cold water production only to system

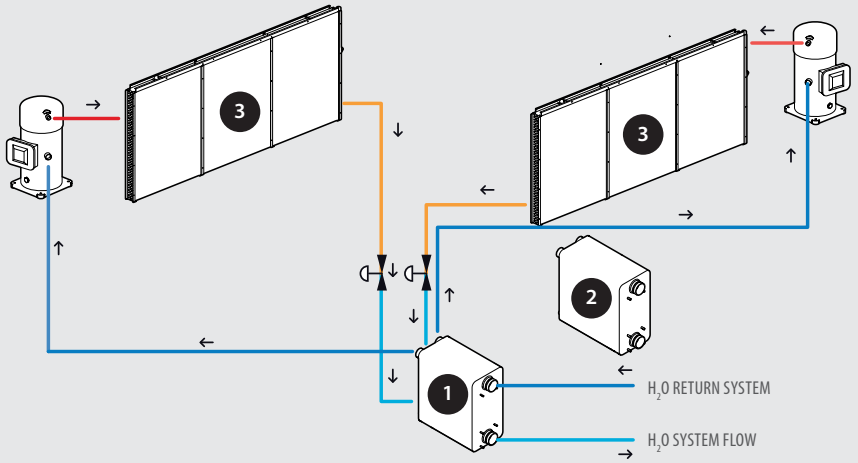

	Description	Functioning
1	Heat exchanger SYSTEM SIDE	(EVAPORATION) cold water production
2	Heat exchanger DHW SIDE	not running
3	Heat exchanger SOURCE SIDE	(CONDENSATION) heat exchange with air

Hot water production only to system

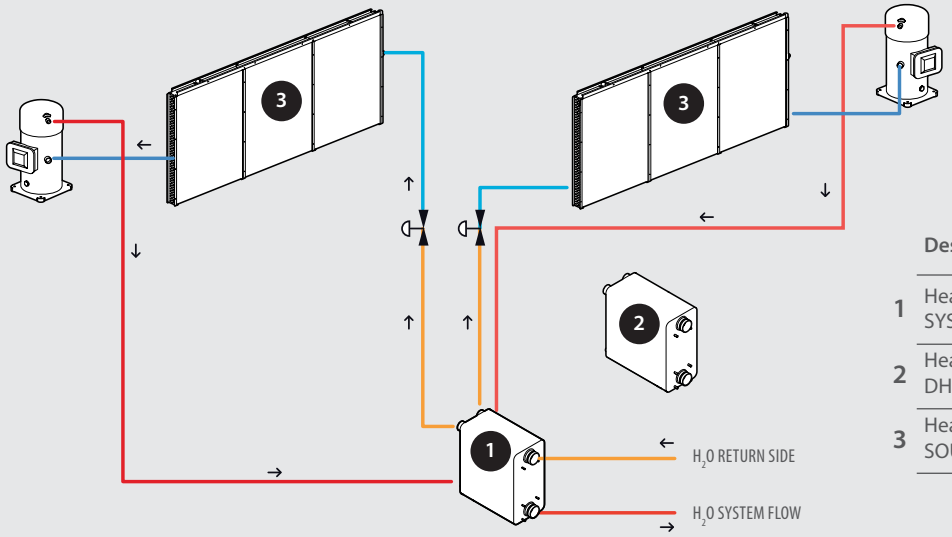

	Description	Functioning
1	Heat exchanger SYSTEM SIDE	(CONDENSATION) hot water production
2	Heat exchanger DHW SIDE	not running
3	Heat exchanger SOURCE SIDE	(EVAPORATION) heat exchange with air

Basic operating production for 2-pipe system+ HDW

Production hot water only to DHW

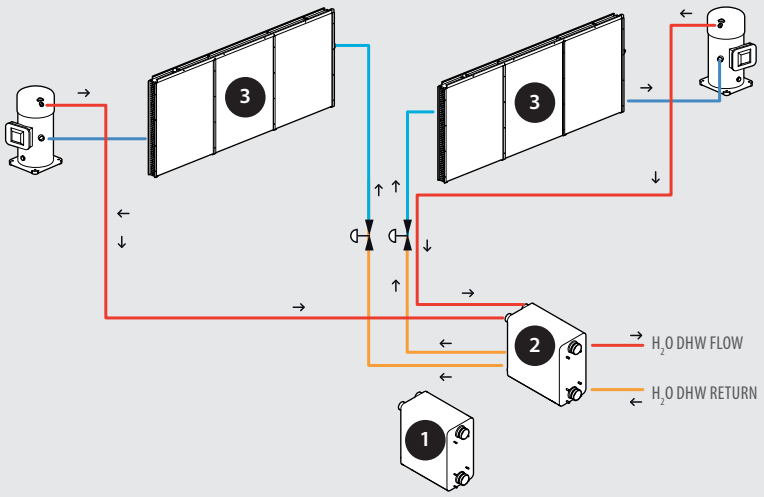

	Description	Functioning
1	Heat exchanger SYSTEM SIDE	not running
2	Heat exchanger DHW SIDE	(CONDENSATION) DHW production
3	Heat exchanger SOURCE SIDE	(EVAPORATION) Heat exchange with air

Production cold water to system and hot water to DHW

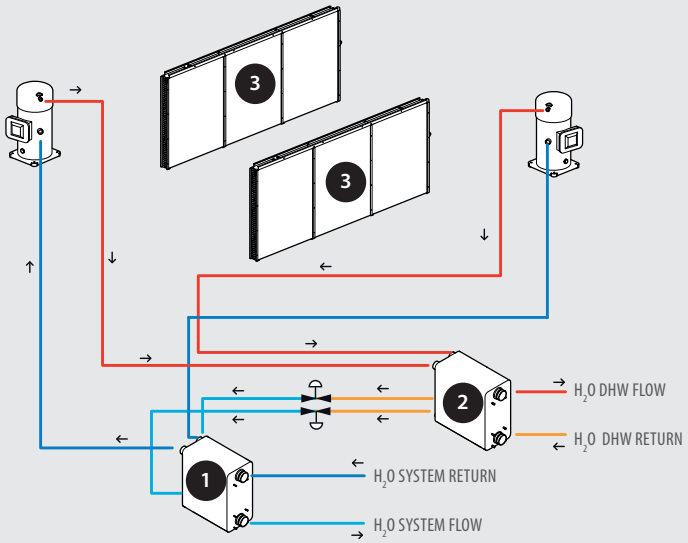

	Description	Functioning
1	Heat exchanger SYSTEM SIDE	(EVAPORATION) cold water production
2	Heat exchanger DHW SIDE	(CONDENSATION) DHW production
3	Heat exchanger SOURCE SIDE	not running

Production hot water to system and hot water to DHW

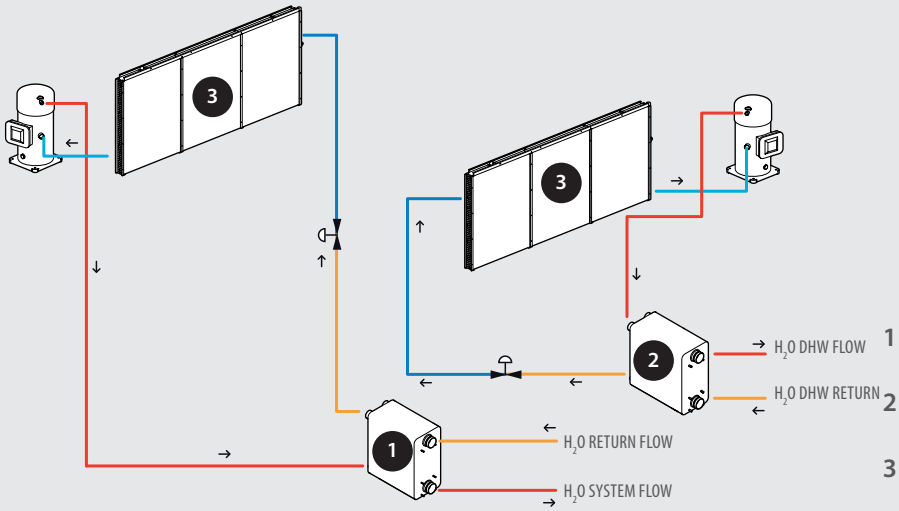

	Description	Functioning
1	Heat exchanger SYSTEM SIDE	(CONDENSATION) hot water production
2	Heat exchanger DHW SIDE	(CONDENSAZIONE) DHW production
3	Heat exchanger SOURCE SIDE	(EVAPORAZIONE) heat exchange with air

Basic operating layout for 4-pipe system

Cold water production only to system

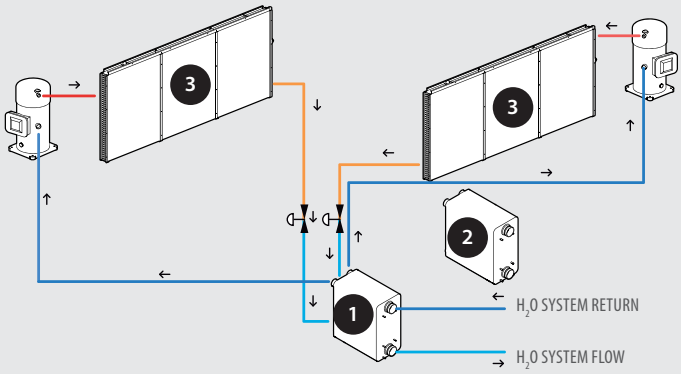

	Description	Functioning
1	Heat exchanger COOLING SIDE	(EVAPORATION) cold water production
2	Heat exchanger HEATING SIDE	not running
3	Heat exchanger SOURCE SIDE	(CONDENSATION) heat exchange with air

Hot water production only to system

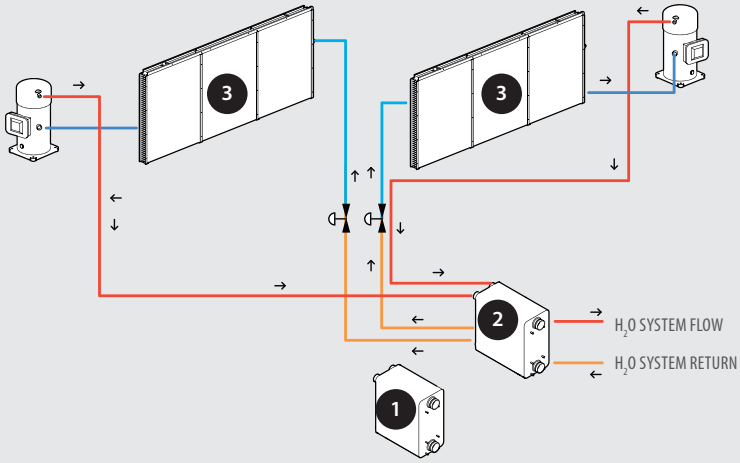

	Description	Functioning
1	Exchanger COOLING SIDE	not running
2	Exchanger HEATING SIDE	(CONDENSATION) hot water production
3	Heat exchanger SOURCE SIDE	(EVAPORATION) heat exchange with air

Silmutaneous hot and cold water production to system

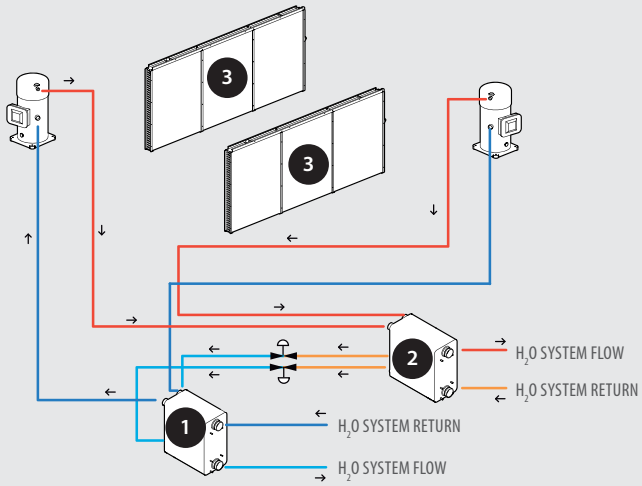

	Description	Functioning
1	Exchanger COOLING SIDE	(EVAPORATION) cold water production
2	Exchanger HEATING SIDE	(CONDENSATION) hot water production
3	Heat Exchanger SOURCE EXCHANGER	not running

TER is the new name for energy efficiency

TER
TOTAL EFFICIENCY RATIO

= (Heating Capacity + Cooling Capacity) / Electrical Power Input

Looking at the technical data for the NRP series it can be seen that the TER values are significantly higher than the values for COP and EER: this demonstrates the overall very high efficiency that a multipurpose heat pump unit can achieve compared to a traditional heat pump without heat recovery. The project designer (in close collaboration with the architect) can therefore achieve the maximum energy savings, optimally balancing the heating and cooling needs for the system installation.

In this example (referring to unit size NRP 1250) the total energy ratio is:

TER = (441 + 339) / 102 = 7.65 (*)

(*) Note this high value compared to traditional heat pump COP and EER values.

Technical features

NRP is the range of multipurpose external units operating on refrigerant R410A, designed for 2 or 4-pipe systems. With just one unit simultaneous and independent requests for hot and chilled water can be accommodated all year round.

Gamma:

- Refrigerant R410A.
- 2 refrigerant circuits.
- High efficiency even at part load.
- NRP, for the sizes from 0800 to 1800, fit plate exchanger but we can even supply **shell&tube version on demand**. For futher information, please refer to specific literature.
- Heat exchangers optimised to benefit from the excel lent heat transfer characteristics of R410A.
- High efficiency scroll compressors.
- Axial fans with low sound level.
- Extremely solid structure with anti-corrosion polyester paint.
- Extended operating limits in heat pump operation:
  - Maximum leaving water temperature 55 °C.
  - External air temperature from -15 °C to 42 °C.
- Units fitted as standard with fan speed controller (DCPX), which permits operation in the winter with external temperatures down to –10 °C, and in heating mode with external temperatures up to 42 °C.
- Available versions:
  - "A" High efficiency heat pump.
  - "E" High efficiency low noise heat pump.
- Fans:
  - "°" Standard.
  - "M" High static pressure.
  - "J" Inverter.
- Options for integrated hydronic modules with pumps, buffer tank, water filter, flow switch, expansion tank.
- Microprocessor controls.

Accessories

- **AER485P1:** RS-485 interface for supervising systems with MODBUS protocol.
- **AERNET:** the device allows the control, the management and the remote monitoring of a Chiller with a PC, smartphone or tablet using Cloud connection. AERNET works as Master while every unit connected is configured as Slave (max. 6 unit); also, with a simple click is possible to save a log file with all the connected unit datas in the personal terminal for post analysis.
- **MULTICHILLER_NRP:** Control system to switch the individual chillers on and off, and command them, in a system in which several units are installed in parallel, always ensuring a constant delivery to the exchanger.
- **PGD1:** Simplified remote panel. Allows control of basic unit functions and alarm notification. Remote mounted up to 500 m away with TWISTED PAIR SCREENED cable and TCONN6J000.
- **GP:** Protection grille protects the external coil from accidental damage.
- **AVX:** Anti-vibration mounts to be installed under the base of the unit.
- **VT:** Anti-vibration mounts to be installed under the base of the unit.

Accessories factory fitted only

- **DRE:** Electronic soft starter which reduces starting current by about 26%.
  Available only with 400V power supply.
- **RIF:** Power factor correction. Connected in parallel to the motor allowing about 10% reduction of input current.

Technical data - NRP 0200-0750

NRP Multipurpose for 2-pipe system*				0200	0240	0280	0300	0330	0350	0500	0550	0600	0650	0700	0750
			V/Ph/Hz	400V/3N/50Hz											
Cooling system side (A)															
12°C / 7°C	Cooling capacity	(1)	kW	/	/	/	/	/	/	100	103	123	140	159	184
	Total input power	(1)	kW	/	/	/	/	/	/	32,5	36,0	44,2	50,5	55,2	64,6
	EER	(1)		/	/	/	/	/	/	3,07	2,87	2,8	2,78	2,88	2,85
	ESEER	(1)		/	/	/	/	/	/	3,71	3,48	4,13	4,09	3,98	3,98
	Cooling Energy Class Eurovent	(1)		/	/	/	/	/	/	A	A	A	A	A	A
	Water flow rate	(1)	l/h	/	/	/	/	/	/	17200	17900	21300	24252	27520	31800
	Pressure drop	(1)	kPa	/	/	/	/	/	/	37	39	37	48	56	67
Cooling system side (E)															
12°C / 7°C	Cooling capacity	(1)	kW	43	50	56	64	68	80	95	99	116	130	152	178
	Total input power	(1)	kW	14,0	16,6	18,9	20,9	23,3	27,1	35,2	39,0	48,4	55,5	61,9	70,6
	EER	(1)		3,05	3,00	2,95	3,05	2,91	2,94	2,68	2,53	2,39	2,35	2,46	2,52
	ESEER	(1)		3,81	3,78	3,85	3,77	3,85	3,73	3,67	3,45	4,03	3,99	3,87	3,87
	Cooling Energy Class Eurovent	(1)		A	A	A	A	A	A	A	A	A	A	A	A
	Water flow rate	(1)	l/h	7400	8600	9630	11000	11700	13770	16340	17030	19874	22530	26300	30867
	Pressure drop	(1)	kPa	26	37	22	29	22	31	34	35	32	41	51	63
Heating system side (A) (E)															
40°C / 45°C	Heating capacity	(2)	kW	46	53	60	75	80	84	107	113	138	153	174	206
	Total input power	(2)	kW	13,3	15,6	17,8	22,4	24,0	25,7	32,6	35,1	41,3	45,7	53,8	62,8
	COP	(2)		3,47	3,41	3,39	3,37	3,35	3,28	3,26	3,21	3,34	3,34	3,23	3,29
	Heating Energy Class Eurovent	(2)		A	A	A	A	A	A	A	A	A	A	A	A
	Water flow rate	(2)	l/h	7912	9116	10300	12900	13760	14448	18232	19270	23564	26144	29756	35260
	Pressure drop	(2)	kPa	30	42	25	40	31	34	42	45	45	56	65	83
Heating DHW side (A) (E)															
40°C / 45°C	Heating capacity	(3)	kW	46	53	60	75	80	84	106	112	138	153	174	206
	Total input power	(3)	kW	13,2	15,5	17,7	22,4	24,0	25,6	32,5	35,0	41,3	45,7	53,5	62,4
	COP	(3)		3,49	3,44	3,4	3,37	3,35	3,3	3,27	3,22	3,33	3,35	3,25	3,3
	Heating Energy Class Eurovent	(3)	l/h	7912	9116	10300	12900	13760	14448	18232	19264	23564	26146	29756	35260
	Water flow rate	(3)	kPa	13	17	21	33	38	19	31	34	51	49	35	50
	Performance under average climatic conditions (Average)														
	Pdesignh	(4)		39	45	51	64	68	71	90	95	116	129	147	174
	SCOP	(4)		3,60	3,53	3,55	3,50	3,50	3,42	3,52	3,50	3,70	3,67	3,55	3,45
	ηs	(4)		141	138	139	137	137	134	138	137	145	144	139	141
	Efficiency Energy Class	(5)		A+	A+	A+	A+	A+	/	/	/	/	/	/	/
Cooling with recovery for versions (A) (E)															
40°C / 45°C - 7°C / 12°C	Cooling capacity	(6)	kW	46	52	58	69	74	87	103	111	134	148	169	203
	Recovered power	(6)	kW	58	67	75	88	95	111	132	143	175	194	219	262
	Total input power	(6)	kW	13,5	15,8	18,1	20,9	22,9	25,9	31,2	33,4	43,9	48,6	53,0	64,1
	Water flow rate system side	(6)	l/h	7852	9040	10040	11868	12745	15000	17800	19195	23070	25598	29163	34925
	Pressure drop	(6)	kPa	29	41	24	33	26	36	40	44	42	52	62	81
	Water flow rate DHW side	(6)	l/h	9976	11520	12900	15136	16340	19092	22704	24424	29928	33196	37496	44892
	Pressure drop	(6)	kPa	20	27	33	46	54	33	47	55	82	78	56	81
	TER		W/W	7,72	7,58	7,39	7,55	7,41	7,67	7,57	7,62	7,05	7,06	7,33	7,27

NRP Multipurpose for 4-pipe system				0200	0240	0280	0300	0330	0350	0500	0550	0600	0650	0700	0750
Cooling system side (A)															
12°C / 7°C	Cooling capacity	(1)	kW	/	/	/	/	/	/	100	103	123	140	159	184
	Total input power	(1)	kW	/	/	/	/	/	/	32,5	36,0	44,2	50,5	55,2	64,6
	EER	(1)		/	/	/	/	/	/	3,07	2,87	2,8	2,78	2,88	2,85
	Water flow rate	(1)	l/h	/	/	/	/	/	/	17200	17900	21300	24252	27520	31800
	Pressure drop	(1)	kPa	/	/	/	/	/	/	37	39	37	48	56	67
Cooling system side (E)															
12°C / 7°C	Cooling capacity	(1)	kW	43	50	56	64	68	80	95	99	116	130	152	178
	Total input power	(1)	kW	14,0	16,6	18,9	20,9	23,3	27,1	35,2	39,0	48,4	55,5	61,9	70,6
	EER	(1)		3,05	3,00	2,95	3,05	2,91	2,94	2,68	2,53	2,39	2,35	2,46	2,52
	Water flow rate	(1)	l/h	7400	8600	9630	11000	11700	13770	16340	17030	19874	22530	26300	30867
	Pressure drop	(1)	kPa	26	37	22	29	22	31	34	35	32	41	51	63
Heating system side (A) (E)															
40°C / 45°C	Heating capacity	(3)	kW	46	53	60	75	80	84	106	112	138	153	174	206
	Total input power	(3)	kW	13,2	15,5	17,7	22,4	24,0	25,6	32,5	35,0	41,3	45,7	53,5	62,4
	COP	(3)		3,49	3,44	3,4	3,37	3,35	3,3	3,27	3,22	3,33	3,35	3,25	3,3
	Water flow rate	(3)	l/h	7912	9116	10300	12900	13760	14448	18232	19264	23564	26146	29756	35260
	Pressure drop	(3)	kPa	13	17	21	33	38	19	31	34	51	49	35	50
	Performance under average climatic conditions (Average)														
	Pdesignh	(4)		39	45	51	64	68	71	90	95	116	129	147	174
	SCOP	(4)		3,60	3,53	3,55	3,50	3,50	3,42	3,52	3,50	3,70	3,67	3,55	3,45
	ηs	(4)		141	138	139	137	137	134	138	137	145	144	139	141
	Efficiency Energy Class	(5)		A+	A+	A+	A+	A+	/	/	/	/	/	/	/
Cooling with recovery for versions (A) (E)															
40°C / 45°C - 7°C / 12°C	Cooling capacity	(6)	kW	46	52	58	69	74	87	103	111	134	148	169	203
	Recovered power	(6)	kW	58	67	75	88	95	111	132	143	175	194	219	262
	Total input power	(6)	kW	13,5	15,8	18,1	20,9	22,9	25,9	31,2	33,4	43,9	48,6	53,0	64,1
	Water flow rate (cold side)	(6)	l/h	7852	9040	10040	11868	12745	15000	17800	19195	23070	25598	29163	34925
	Pressure drop	(6)	kPa	29	41	24	33	26	36	40	44	42	52	62	81
	Water flow rate (hot side)	(6)	l/h	9976	11520	12900	15136	16340	19092	22704	24424	29928	33196	37496	44892
	Pressure drop	(6)	kPa	20	27	33	46	54	33	47	55	82	78	56	81
	TER		W/W	7,72	7,58	7,39	7,55	7,41	7,67	7,57	7,62	7,05	7,06	7,33	7,27

Date (14511:2013) *** Only units configured for 2-pipe systems are certified by Eurovent**

(1) Water evaporator 12°C/7°C, External air 35°C (EUROVENT)

(2) Water condenser 40°C/45°C, External air 7°C b.s./6°C b.u. (EUROVENT)

(3) Water Total Recovery 40°C/45°C.

(4) Efficiencies for low temperature applications (35°C)

(5) Efficiency Energy Class in according to regulation n°811/2013 Pdesignh ≤ 70kW

(6) Water Total Recovery 40°C/45°C, Water evaporator (7°C)

TER Global Efficiency

Technical data - NRP 800-1800

NRP Multipurpose for 2-pipe system*				0800	0900	1000	1250	1404	1504	1655	1800
		V/Ph/Hz		400V/3N/50Hz							
Cooling system side (A)											
12°C / 7°C	Cooling capacity	(1)	kW	217	242	259	321	363	400	439	475
	Total input power	(1)	kW	73,5	83,4	89,4	109,4	122,6	136,7	147,2	157,9
	EER	(1)		2,95	2,90	2,89	2,94	2,97	2,93	2,98	3,01
	ESEER	(1)		4,01	3,90	3,82	3,96	3,80	3,72	3,74	3,71
	Cooling Energy Class Eurovent	(1)		B	B	C	B	B	B	B	B
	Water flow rate	(1)	l/h	37498	41796	44753	55556	62852	69171	75888	81966
	Pressure drop	(1)	kPa	59	58	54	64	52	53	55	55
Cooling system side (E)											
12°C / 7°C	Cooling capacity	(1)	kW	199	216	229	290	331	367	400	428
	Total input power	(1)	kW	81,2	95,2	101,3	121,8	135,6	150,6	163,1	176,7
	EER	(1)		2,45	2,27	2,26	2,38	2,44	2,44	2,46	2,42
	ESEER	(1)		3,92	3,87	3,78	3,93	3,77	3,66	3,72	3,74
	Cooling Energy Class Eurovent	(1)		E	F	F	E	E	E	E	E
	Water flow rate	(1)	l/h	34477	37289	39609	50044	57122	63288	69115	73977
	Pressure drop	(1)	kPa	50	47	43	54	43	44	46	45
Heating system side (A) (E)											
40°C / 45°C	Heating capacity	(2)	kW	242	259	292	387	402	461	506	547
	Total input power	(2)	kW	74,7	81,1	89,4	117,2	121,5	140,0	155,7	167,5
	COP	(2)		3,25	3,20	3,26	3,30	3,31	3,30	3,25	3,27
	Heating Energy Class Eurovent	(2)		A	A	A	A	A	A	A	A
	Water flow rate	(2)	l/h	41452	44312	49946	66115	68833	78870	86579	93555
	Pressure drop	(2)	kPa	72	66	68	93	63	68	72	72
Heating DHW side (A) (E)											
40°C / 45°C	Heating capacity	(3)	kW	242	259	291	385	401	460	505	546
	Total input power	(3)	kW	74,3	80,7	89,0	116,0	121,0	139,5	155,0	166,8
	COP	(3)		3,26	3,21	3,27	3,32	3,32	3,3	3,26	3,27
	Water flow rate	(3)	l/h	41452	44312	49946	66048	68833	78870	86579	93555
	Pressure drop	(3)	kPa	50	44	49	49	44	51	51	53
	Performance under average climatic conditions (Average)										
	Pdesignh	(4)		204	219	246	3.26	339	389	/	/
	SCOP	(4)		3,60	3,60	3,60	3,70	3,75	3,72	/	/
	ηs	(4)		141	141	141	145	147	146	/	/
Cooling with recovery for versions (A) (E)											
40°C / 45°C - 7°C / 12°C	Cooling capacity	(6)	kW	46	52	58	69	74	87	103	111
	Recovered power	(6)	kW	58	67	75	88	95	111	132	143
	Total input power	(6)	kW	13,5	15,8	18,1	20,9	22,9	25,9	31,2	33,4
	Water flow rate system side	(6)	l/h	7852	9040	10040	11868	12745	15000	17800	19195
	Pressure drop	(6)	kPa	29	41	24	33	26	36	40	44
	Water flow rate DHW side	(6)	l/h	9976	11520	12900	15136	16340	19092	22704	24424
	Pressure drop	(6)	kPa	20	27	33	46	54	33	47	55
	TER		W/W	7,72	7,58	7,39	7,55	7,41	7,67	7,57	7,62

NRP Multipurpose for 4-pipe system				0800	0900	1000	1250	1404	1504	1655	1800
Cooling system side (A)											
12°C / 7°C	Cooling capacity	(1)	kW	217	242	259	321	363	400	439	475
	Total input power	(1)	kW	73,5	83,4	89,4	109,4	122,6	136,7	147,2	157,9
	EER	(1)		2,95	2,90	2,89	2,94	2,97	2,93	2,98	3,01
	Water flow rate	(1)	l/h	37498	41796	44753	55556	62852	69171	75888	81966
	Pressure drop	(1)	kPa	59	58	54	64	52	53	55	55
Cooling system side (E)											
12°C / 7°C	Cooling capacity	(1)	kW	199	216	229	290	331	367	400	428
	Total input power	(1)	kW	81,2	95,2	101,3	121,8	135,6	150,6	163,1	176,7
	EER	(1)		2,45	2,27	2,26	2,38	2,44	2,44	2,46	2,42
	Water flow rate	(1)	l/h	34477	37289	39609	50044	57122	63288	69115	73977
	Pressure drop	(1)	kPa	50	47	43	54	43	44	46	45
Heating system side (A) (E)											
40°C / 45°C	Heating capacity	(3)	kW	242	259	291	385	401	460	505	546
	Total input power	(3)	kW	74,3	80,7	89,0	116,0	121,0	139,5	155,0	166,8
	COP	(3)		3,26	3,21	3,27	3,32	3,32	3,3	3,26	3,27
	Water flow rate	(3)	l/h	41452	44312	49946	66048	68833	78870	86579	93555
	Pressure drop	(3)	kPa	50	44	49	49	44	51	51	53
	Performance under average climatic conditions (Average)										
	Pdesignh	(4)		204	219	246	3.26	339	389	/	/
	SCOP	(4)		3,60	3,60	3,60	3,70	3,75	3,72	/	/
	ηs	(4)		141	141	141	145	147	146	/	/
Cooling with recovery for versions (A) (E)											
40°C / 45°C - 7°C / 12°C	Cooling capacity	(6)	kW	226	254	282	339	384	428	470	503
	Recovered power	(6)	kW	291	330	366	434	493	552	601	645
	Total input power	(6)	kW	68,92	80,24	89,65	102	116,23	132,97	140,38	151,76
	Water flow rate (cold side)	(6)	l/h	38924	43834	48556	58291	66151	73685	80797	86568
	Pressure drop	(6)	kPa	63	64	63	70	57	60	62	61
	Water flow rate (hot side)	(6)	l/h	49708	56417	62609	74305	84453	94601	102857	110425
	Pressure drop	(6)	kPa	72	72	78	63	66	73	72	74
	TER		W/W	7,5	7,29	7,23	7,58	7,55	7,38	7,63	7,57

EUROVENT CERTIFIED PERFORMANCE
www.eurovent-certification.com

Aermec participates in the EUROVENT programme: LCP. The products involved can be found at the website www.eurovent-certification.com

General data - NRP 0200-0750

NRP				0200	0240	0280	0300	0330	0350	0500	0550	0600	0650	0700	0750
Electrical data															
Total input current	(1)	A	A	-	-	-	-	-	-	55	59	72	82	88	113
	(1)	E	A	28	33	38	41	45	52	60	64	79	91	99	120
Maximum current (FLA)	(1)	A/E	A	36	41	46	53	58	63	76	81	100	112	122	144
Starting current (LRA)	(1)	A/E	A	119	150	155	184	190	200	214	220	232	243	261	320
Compressors															
Compressors			type/n°	scroll/2	scroll/2	scroll/2	scroll/2	scroll/2	scroll/2	scroll/3	scroll/3	scroll/4	scroll/4	scroll/4	scroll/4
Circuits			n°	2	2	2	2	2	2	2	2	2	2	2	2
Capacity control			%	0/50/100	0/50/100	0/50/100	0/50/100	0/50/100	0/50/100	0/50/100	0/50/100	0/50/100	0/25/50/100	0/25/50/100	0/25/50/100
Refrigerant				R410A	R410A	R410A	R410A	R410A	R410A	R410A	R410A	R410A	R410A	R410A	R410A
Exchanger side (hot/cold) 2 pipe system / side (cold) 4 pipe system															
Exchanger			type/n°	plate/1	plate/1	plate/1	plate/1	plate/1	plate/1	plate/1	plate/1	plate/1	plate/1	plate/1	plate/1
hydraulic connections		(in/out)	Ø	2"1/2	2"1/2	2"1/2	2"1/2	2"1/2	2"1/2	2"1/2	2"1/2	2"1/2	2"1/2	2"1/2	3"
Exchanger side (DHW) 2 pipe system / side (hot) 4 pipe system															
Exchanger			type/n°	plate/1	plate/1	plate/1	plate/1	plate/1	plate/1	plate/1	plate/1	plate/1	plate/1	plate/1	plate/1
hydraulic connections		(in/out)	Ø	2"1/2	2"1/2	2"1/2	2"1/2	2"1/2	2"1/2	2"1/2	2"1/2	2"1/2	2"1/2	2"1/2	3"
Fans standard															
Fans			type/n°	axial/6	axial/6	axial/6	axial/8	axial/8	axial/8	axial/2	axial/2	axial/2	axial/2	axial/3	axial/3
Air flow rate		A	m^3/h	-	-	-	-	-	-	37000	37000	36500	36500	58000	48000
cooling mode		E	m^3/h	20000	20000	20000	26000	26000	26000	20200	21100	21400	22400	31900	34600
Air flow rate heating mode			m^3/h	20000	20000	20000	26000	26000	26000	37000	37000	36500	36500	58000	48000
System integrated hydronic module															
Buffer tank			l.	300	300	300	300	300	300	500	500	500	500	500	700
Useful head			kPa	For more information, refer to the selection program or the technical documentation available											
Soud data (cooling mode)															
Sound pressure	(2)	A	dB(A)	-	-	-	-	-	-	50	50	50	51	53	53
	(2)	E	dB(A)	42	42	42	43	43	44	42	42	42	43	45	45
Sound power	(2)	A	dB(A)	-	-	-	-	-	-	82	82	82	83	85	85
	(2)	E	dB(A)	74	74	74	75	75	76	74	74	74	75	77	77

General data - NRP 0800-1800

NRP				0800	0900	1000	1250	1404	1504	1655	1800
Electrical data											
Total input current	(1)	A	A	136	158	180	196	235	273	289	304
	(1)	E	A	145	169	192	211	251	292	306	324
Maximum current (FLA)	(1)	A/E	A	173	195	217	267	296	325	365	398
Starting current (LRA)	(1)	A/E	A	348	404	426	535	505	534	633	666
Compressors											
Compressors			type/n°	scroll/4	scroll/4	scroll/4	scroll/4	scroll/4	scroll/4	scroll/5	scroll/6
Circuits			n°	2	2	2	2	2	2	2	2
Capacity control			%								
Refrigerant				R410A	R410A	R410A	R410A	R410A	R410A	R410A	R410A
Exchanger side (hot/cold) 2 pipe system / side (cold) 4 pipe system											
Exchanger			type/n°	plate/1	plate/1	plate/1	plate/1	plate/1	plate/1	plate/1	plate/1
hydraulic connections			(in/out) Ø	3"	3"	3"	4"	4"	4"	4"	4"
Exchanger side (DHW) 2 pipe system / side (hot) 4 pipe system											
Exchanger			type/n°	plate/2	plate/2	plate/2	plate/2	plate/2	plate/2	plate/2	plate/2
hydraulic connections			(in/out) Ø	3"	3"	3"	4"	4"	4"	4"	4"
Fans standard											
Fans			type/n°	axial/4	axial/4	axial/4	axial/6	axial/6	axial/6	axial/6	axial/8
Air flow rate		A	m^3/h	85600	84600	83600	126000	124200	122400	168000	165600
cooling mode		E	m^3/h	59920	59220	60610	88200	90000	91800	117600	115920
Air flow rate heating mode			m^3/h	85600	84600	83600	126000	124200	122400	168000	165600
System integrated hydronic module											
Useful head			kPa	For more information, refer to the selection program or the technical documentation							
Sound data (cooling mode)											
Sound pressure	(2)	A	dB(A)	56,5	56,5	56,5	59,5	59	58,5	60	62
	(2)	E	dB(A)	51	51	51	54	53,5	53	54,5	56,5
Sound power	(2)	A	dB(A)	88,5	88,5	88,5	91,5	91	91,5	92	94
	(2)	E	dB(A)	83	83	83,5	86	85,5	85	86,5	88,5

Sound power
Aermec determines sound power values on the basis of measurements made in accordance with UNI EN ISO 9614-2, as required for Eurovent certification.
Sound pressure
Sound pressure in free field, at 10 m distance from the external surface of the unit (in accordance with UNI EN ISO 3744).

(1) The electrical data of the versions without hydronic module integrated
(2) Calculated in cooling mode
Note: For more information, refer to the selection program or the technical documentation available on the website www.aermec.com

Technical drawings

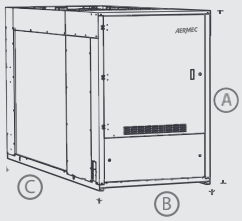

NRP 0200 - 0280

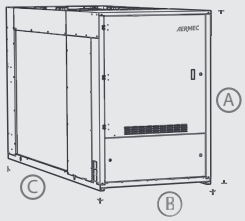

NRP 0300 - 0350

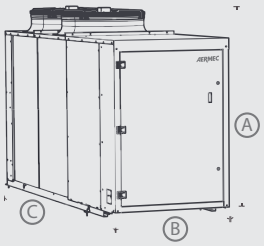

NRP 0500-0650

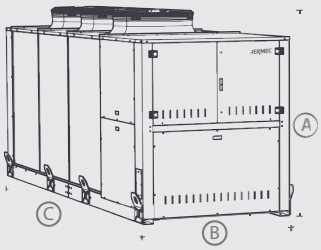

NRP 0700 - 0750

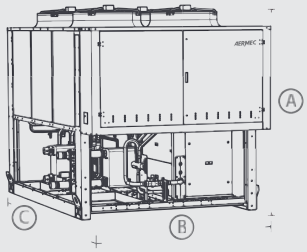

NRP 0800 - 1000

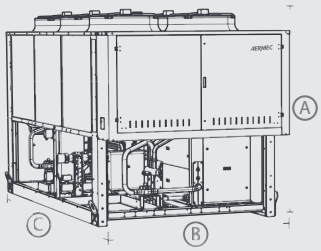

NRP 1250 - 1504

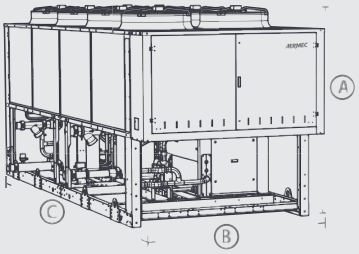

NRP 1655 - 1800

Dimensions (mm)

NRP 0200-0750		Version	0200	0240	0280	0300	0330	0350	0500	0550	0600	0650	0700	0750
Height (mm)	A	All	1606	1606	1606	1606	1606	1606	1875	1875	1875	1875	1875	1975
Width (mm)	B	All	1100	1100	1100	1100	1100	1100	1100	1100	1100	1100	1100	1500
Depth (mm)	C	All	2700	2700	2700	3200	3200	3200	3342	3342	3342	3342	4342	4350
Weight when empty	(kg)	*	788	790	792	862	872	894	1233	1237	1359	1378	1591	1939

NRP 0800-1800		Version	800	900	1000	1250	1404	1504	1655	1800
Height (mm)	A	All	2450	2450	2450	2450	2450	2450	2450	2450
Width (mm)	B	All	2200	2200	2200	2200	2200	2200	2200	2200
Depth (mm)	C	All	3400	3400	3400	4250	4250	4250	5750	5750
Weight when empty	kg	*	2270	2460	2640	2970	3220	3430	3950	4090

* Weight of standard unit without hydronic kit and accessories.

For futhers informations, please refer to the selection program Magellan to the technical booklet available in the web site www.aermec.com

Total comfort. Maximum efficiency. Minimum consumption.
This is Aermec. Italian technology serving your comfort.

Aermec's capacity to remain leader in an evolving market is based on constant research for quality and innovation. A total Italian quality because each unit is designed, developed and tested in the modern and technologically advanced research laboratories of Aermec in Bevilacqua (Verona).
Constant attention to research and the final product quality is also developed through continuous training of specialised personnel and a close collaboration with the most prestigious Italian Universities.

Room for fan coils, split system and small chiller acoustic test.

Aermec S.p.A.
Via Roma, 996
37040 Bevilacqua (VR) - Italia
Tel. + 39 0442 633111
Fax +39 0442 93577
sales@aermec.com
www.aermec.com

Cod. DNRPUY_02